Electrolux PROFESSIONAL

Modular Cooking Range Line 900XP 4-Hot Plates Electric Boiling Top

ITEM #

MODEL #

NAME #

SIS #

AIA #



391040 (E9ECEH4Q00)	4-hot square plates (4 kW each) electric boiling top
391166 (E9ECEH4Q0N)	4-hot plate (4 kW each) electric boiling top

Short Form Specification

Item No.

To be installed on open base installations, bridging supports or cantilever systems. Four 4 kW square cast-iron hot plates hermetically sealed to the one-piece top. Exterior panels of unit in stainless steel with Scotch Brite finish. Extra strength work top in heavy duty 2 mm stainless steel. Right-angled side edges to allow flush-fitting junction between units.

APPROVAL:

Main Features

- Unit to be mounted on open base cupboards, bridging supports or cantilever systems.
- The four 4kW cast-iron plates are hermtically sealed to the one-piece top. Hot plates with a power of 4kW for each plate.
- The special design of the control knob system guarantees against water infiltration.
- IPX5 water protection.
- Top configuration allows installation on ambient base only (not possible to install on refrigerated nor freezer base).
- Suitable for countertop installation.

Construction

- Unit is 930 mm deep to give a larger working surface area.
- All exterior panels in Stainless Steel with Scotch Brite finishing.
- AISI 304 stainless steel worktop, 2mm thick.
- Model has right-angled side edges to allow flush fitting joints between units, eliminating gaps and possible dirt traps.

Optional Accessories

• GN2/1 chrome grid for static oven (only for 391166)	PNC 164250 ❑
• Pair of cast iron plate bars for electric cooking top	PNC 206056 ❑
• Junction sealing kit	PNC 206086 ❑
• Support for bridge type installation, 800mm	PNC 206137 ❑
• Support for bridge type installation, 1000mm	PNC 206138 ❑
• Support for bridge type installation, 1200mm	PNC 206139 ❑
• Support for bridge type installation, 1400mm	PNC 206140 ❑
• Support for bridge type installation, 1600mm	PNC 206141 ❑
• Water column with swivel arm (water column extension not included)	PNC 206289 ❑
• Water column extension for 900 line	PNC 206290 ❑
• Chimney upstand, 800mm	PNC 206304 ❑
• Back handrail 800 mm	PNC 206308 ❑
• Back handrail 1200 mm	PNC 206309 ❑
• Support frame for 2 pasta cooker basket (900XP) (only for 391040)	PNC 206395 ❑
• Chimney grid net, 400mm (700XP/900)	PNC 206400 ❑

• Side handrail-right/left hand (900XP)	PNC 216044	❑
• Frontal handrail, 800mm	PNC 216047	❑
• Frontal handrail, 1200mm	PNC 216049	❑
• Frontal handrail, 1600mm	PNC 216050	❑
• Large handrail - portioning shelf, 400mm (only for 391166)	PNC 216185	❑
• Large handrail - portioning shelf, 800mm	PNC 216186	❑
• 2 side covering panels for top appliances	PNC 216278	❑

The company reserves the right to make modifications to the products without prior notice. All information correct at time of printing.

Modular Cooking Range Line 900XP 4-Hot Plates Electric Boiling Top

Front

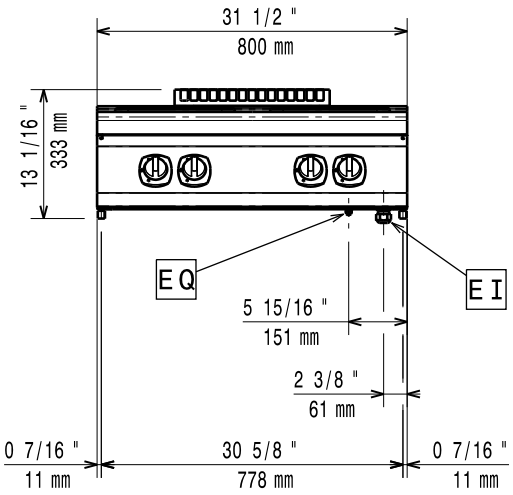

Side

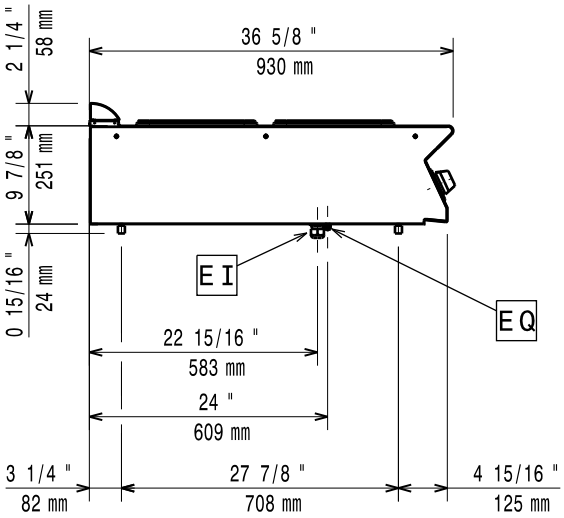

EI = Electrical inlet (power)
EQ = Equipotential screw

Top

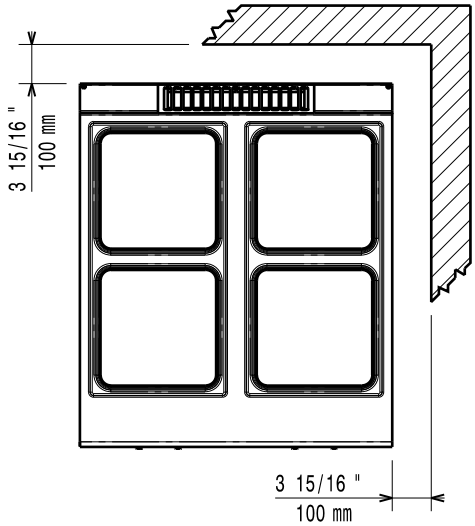

Electric

Supply voltage:	
391040 (E9ECEH4Q00)	380-400 V/3 ph/50-60 Hz
391166 (E9ECEH4Q0N)	230 V/3 ph/50/60 Hz
Total Watts:	16 kW

Key Information:

If appliance is set up or next to or against temperature sensitive furniture or similar, a safety gap of approximately 150 mm should be maintained or some form of heat insulation fitted.

Net weight:	
391040 (E9ECEH4Q00)	60 kg
391166 (E9ECEH4Q0N)	69 kg
Shipping weight:	72 kg
Shipping height:	530 mm
Shipping width:	
391040 (E9ECEH4Q00)	1020 mm
391166 (E9ECEH4Q0N)	1010 mm
Shipping depth:	860 mm
Shipping volume:	0.46 m³
[NOT TRANSLATED]	
391040 (E9ECEH4Q00)	EH94T
391166 (E9ECEH4Q0N)	N9CE1
Front Plates Power:	4 - 4 kW
Back Plates Power:	4 - 4 kW
Front Plates dimensions:	300x300 300x300
Back Plates dimensions:	300x300 300x300

The company reserves the right to make modifications to the products without prior notice. All information correct at time of printing.

2026.11.20